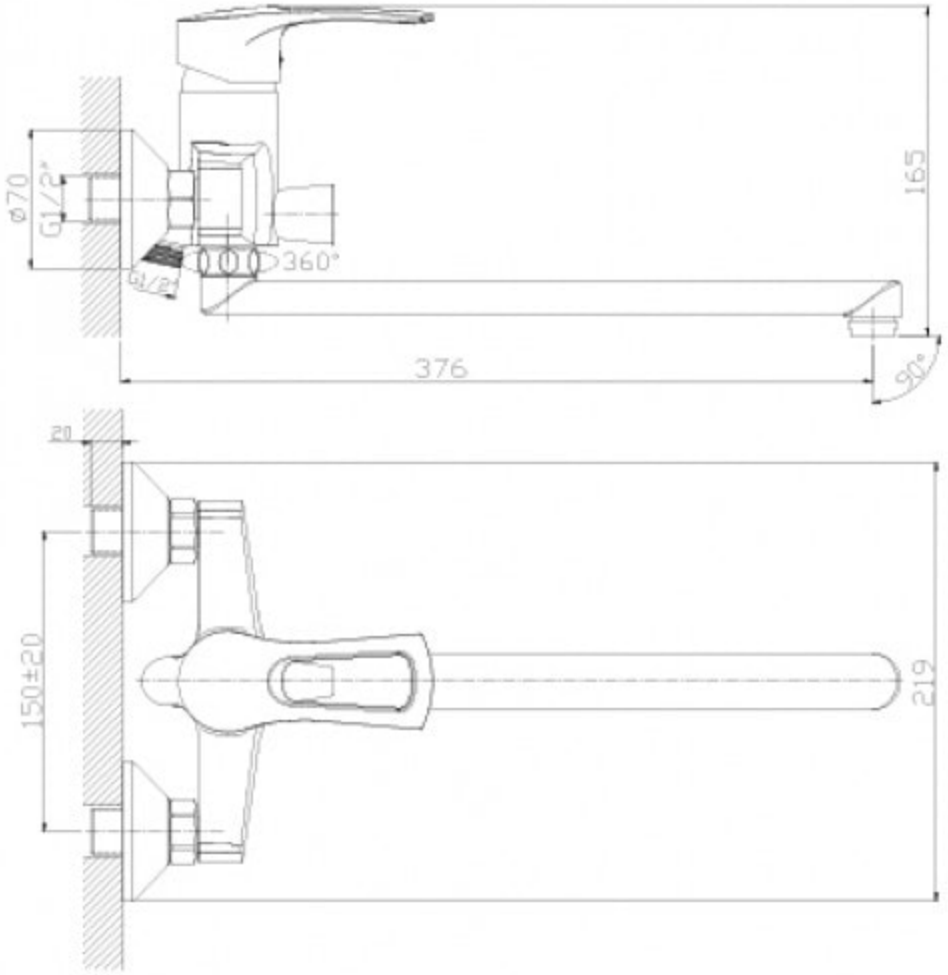
ø70
G1/2"
G1/2"
360°
165
376
90°
20
150±20
219