Istanbul

Description	Istanbul Joystick Bidet Mixer (with Pop-Up)
Code	A41832EXP
Water Label	A

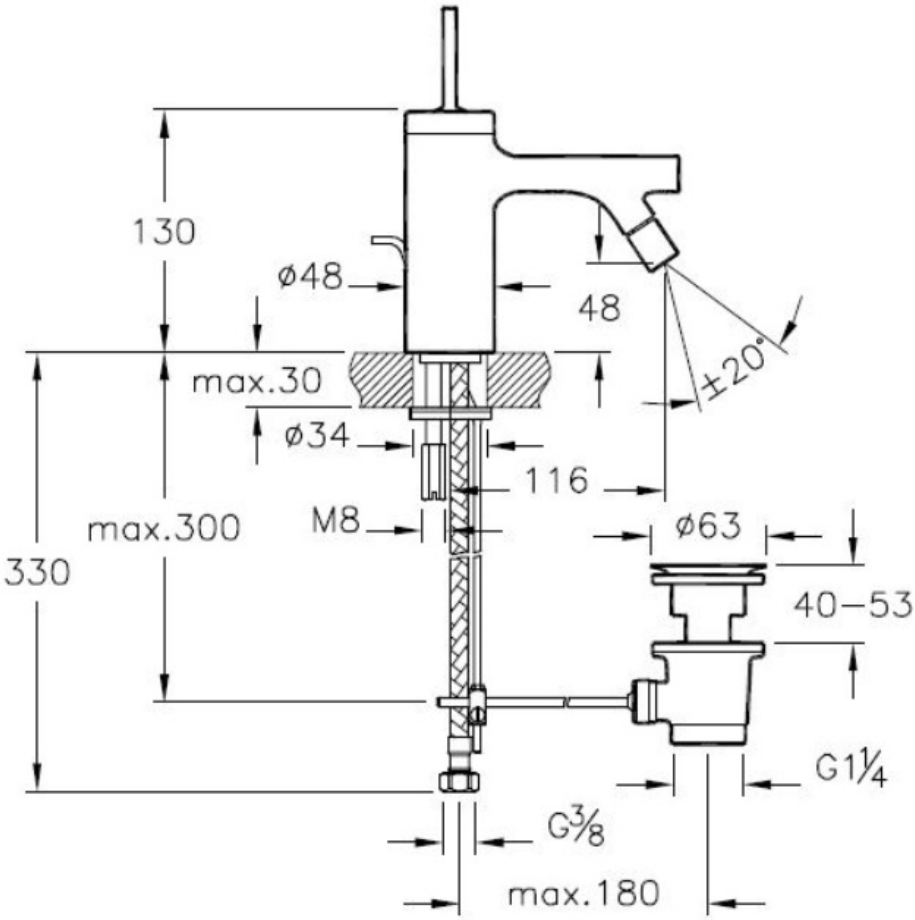

VitrA retains the right to change details about the products and technical specifications without prior notice.