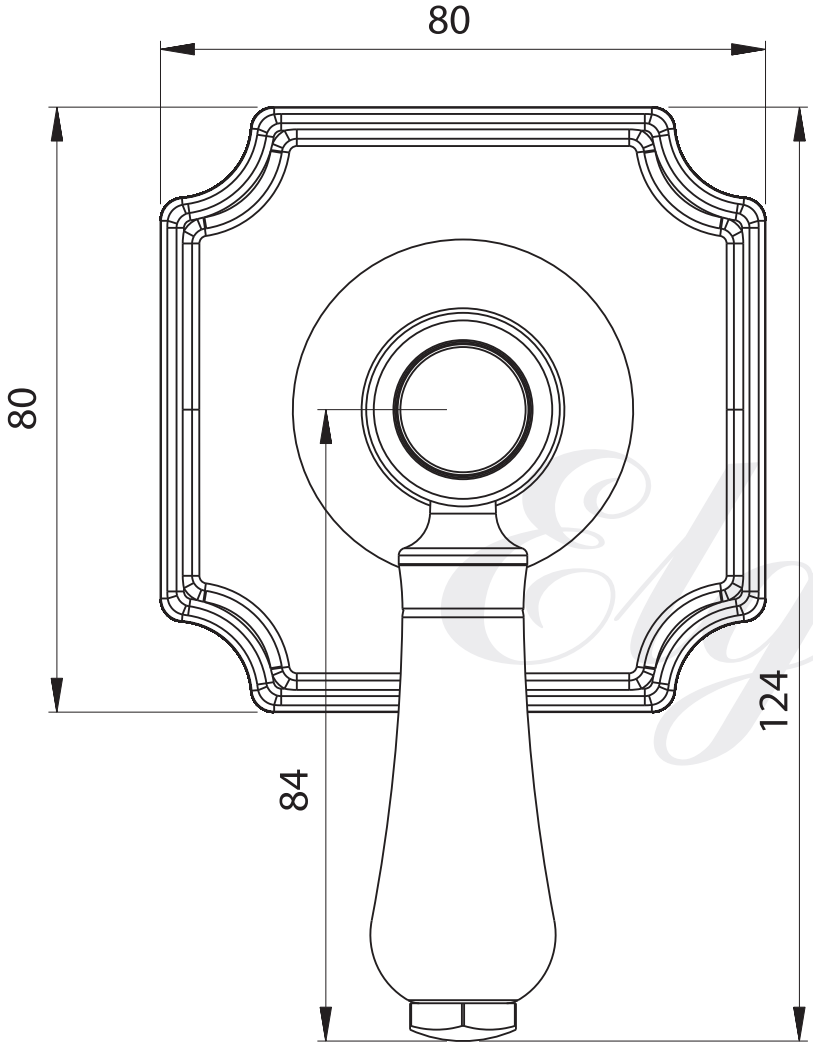
80
80
84
124

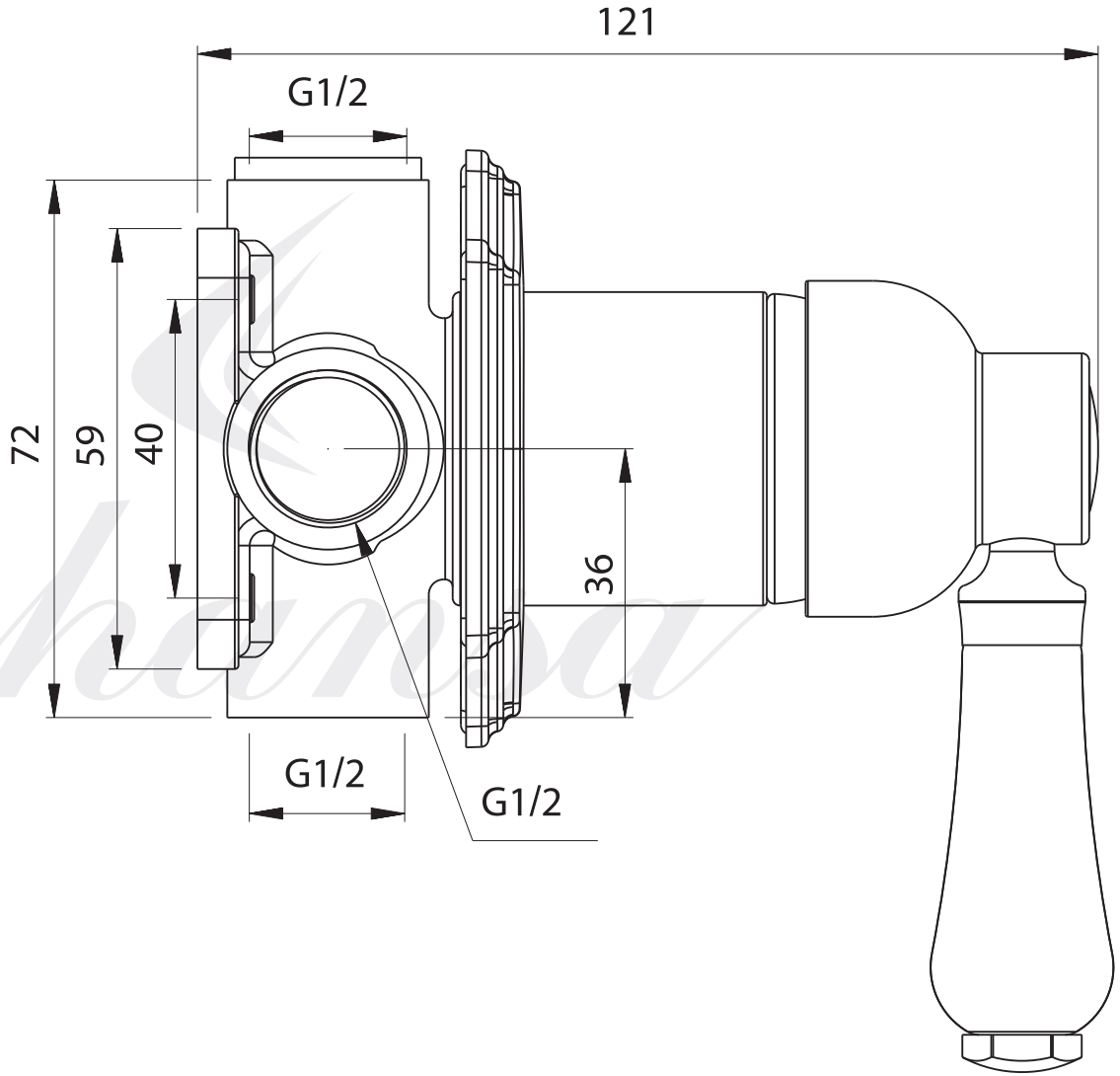
121
G1/2
72
59
40
36
G1/2
G1/2