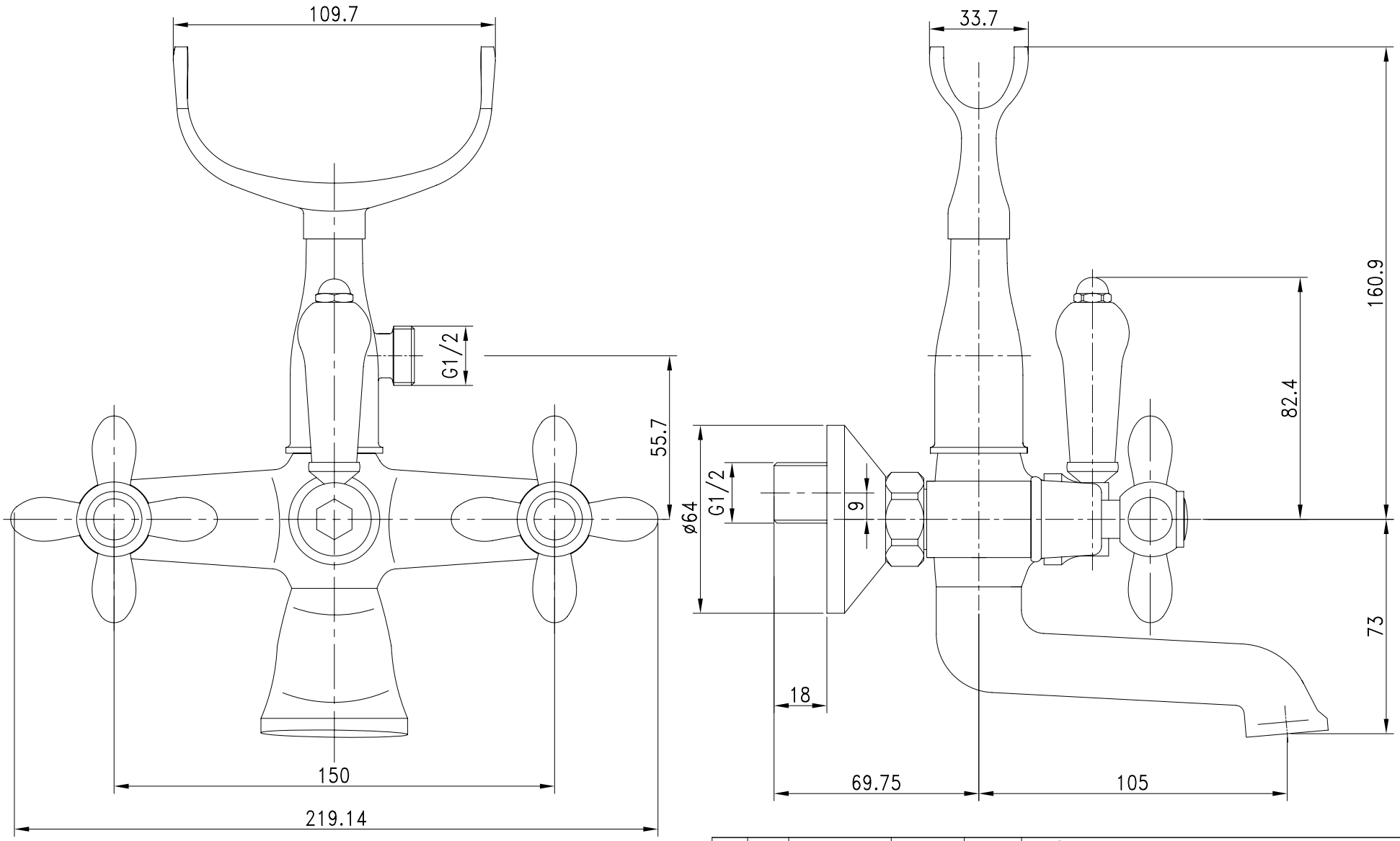

					ZHEJIANG SUERDA SANITARY CO.,LTD.		
NO.	QTY	Description	Signature	Date	EXPLODE DRAWING		
DESIGN				Version			
CHECK				1.0	SIZE A3	DRAWING No.	PRODUCT No.
APPROVE					SCALE 1:2	SD98901-00-00	SD98901